SERIES

R-T-MV

IMPACT CRUSHER

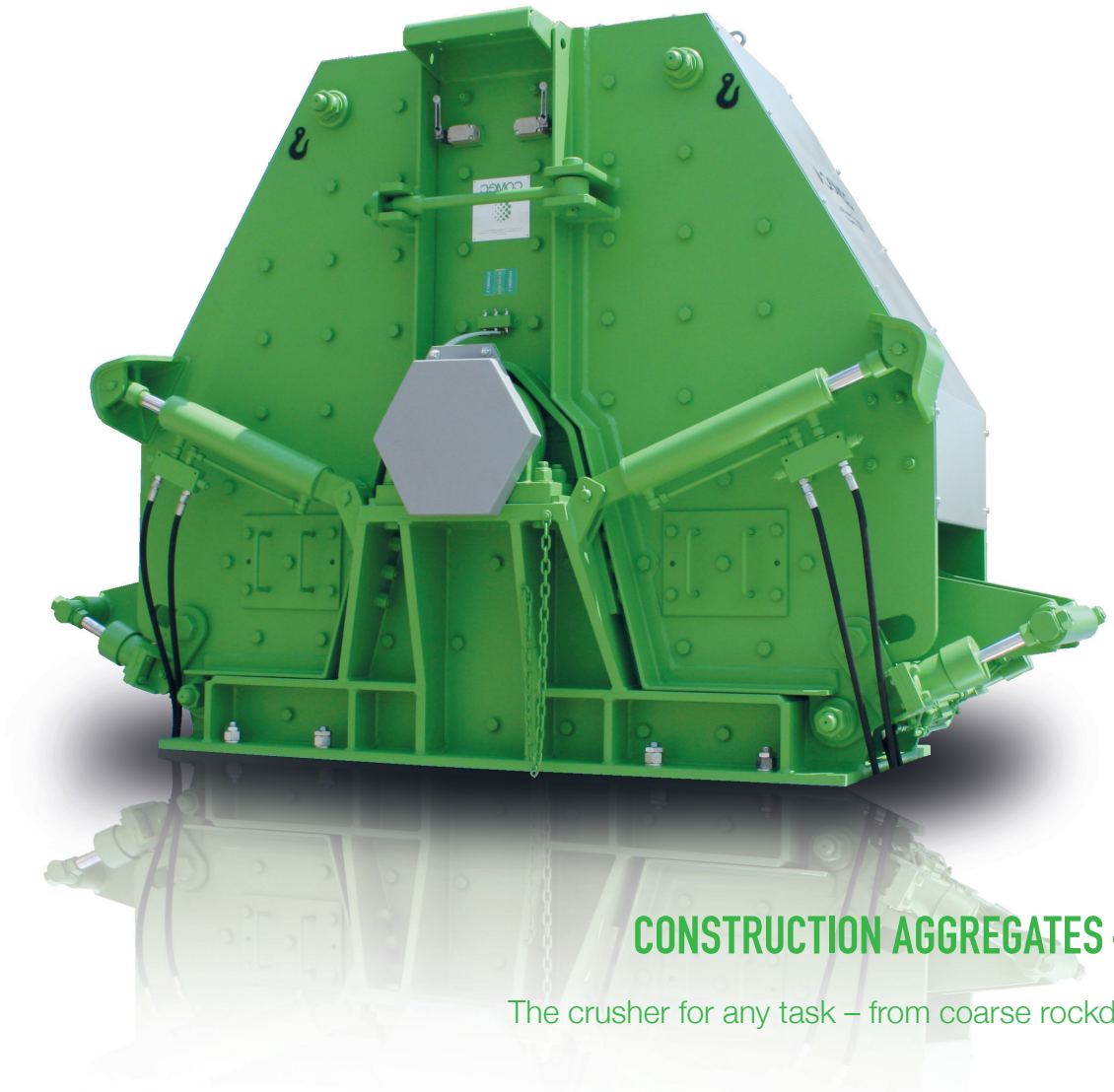

CONSTRUCTION AGGREGATES – MINING

The crusher for any task – from coarse rockdust to sand

COMEC

www.comec.it

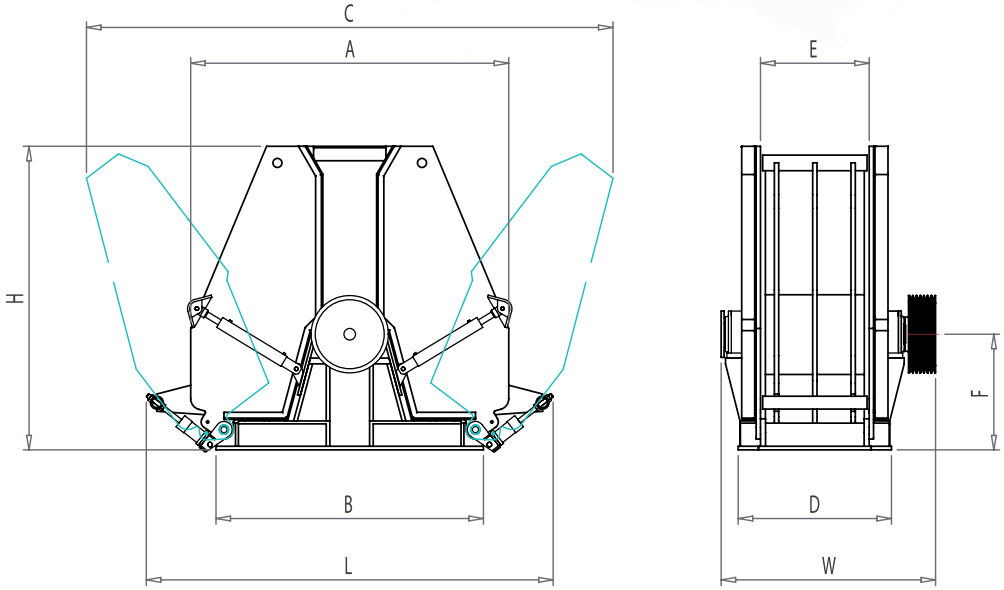

COMEC

SERIES

R-T-MV

IMPACT CRUSHERS

Technical data									
Model	Dimensions in mm								
	L	W	H	A	B	C	D	E	F
R 551	2830	1300	2100	2200	1850	3455	910	546	800
R 701	2830	1450	2100	2200	1850	3455	1060	696	800
R 1101	2830	1910	2100	2200	1850	3455	1460	1096	800
R 1401	2830	2200	2100	2200	1850	3455	1750	1386	800
T 550	2830	1300	1850	2200	1850	3125	910	546	800
T 700	2830	1450	1850	2200	1850	3125	1060	696	800
T 1100	2830	1910	1850	2200	1850	3125	1460	1096	800
T 1400	2830	2200	1850	2200	1850	3125	1750	1386	800
T 1950	2830	2760	1850	2200	1850	3125	2300	1950	800
MV 550	2830	1330	1850	2200	1850	3125	910	546	800
MV 700	2830	1470	1850	2200	1850	3125	1060	696	800
MV 1100	2830	1930	1850	2200	1850	3125	1460	1096	800
MV 1400	2830	2200	1850	2200	1850	3125	1750	1386	800

Model	Max. feeding size	Output up to	Power	Rotor speed	Output with 5 mm sieve	Weight
	mm	t/h	kW	n/min	%	kg
R 551	15÷150	40÷70	75÷110	700÷780	40÷60%	8600
R 701	15÷150	55÷85	90÷132	700÷780	40÷60%	9500
R 1101	15÷150	80÷135	132÷200	700÷780	40÷60%	13000
R 1401	15÷150	110÷170	160÷250	700÷780	40÷60%	15500
T 550	10÷90	30÷50	75÷110	780÷890	50÷70%	7500
T 700	10÷90	35÷65	90÷132	780÷890	50÷70%	8400
T 1100	10÷90	60÷100	132÷200	780÷890	50÷70%	11500
T 1400	10÷90	80÷150	160÷250	780÷890	50÷70%	14500
T 1950	10÷90	150÷250	250÷315	780÷890	50÷70%	19000
MV 550	5÷50	30÷50	75÷110	890÷1150	80÷90%	7000
MV 700	5÷50	35÷65	90÷132	890÷1150	80÷90%	8000
MV 1100	5÷50	60÷100	132÷200	890÷1150	80÷90%	11000
MV 1400	5÷50	80÷150	160÷250	890÷1150	80÷90%	14000

COMEC

TASK

Impact crushers comminute the most different kinds of rock into cubic form, while the proportion of fines is kept as low as possible.

SOLUTION

The COMEC range includes three impact crusher versions:

Version R – for a feeding grain size up to 150 mm (in a closed circuit with preliminary scalping at 25 mm). Series R are fitted with a rotor with 4 beater blades.
Version T – for a feeding grain size up to 100 mm (in a closed circuit with preliminary scalping at 10 mm). Series R are fitted with a rotor with 3/4 beater blades.
Version MV – for a feeding grain size up to 50 mm (in a closed circuit with preliminary scalping at 5 mm). Series R are fitted with a rotor with 2/3 beater blades.

Serial manganese steel beater blades and armourings ensure maximum service life. For applications with abrasive material, the impact crusher are fitted with beater blades and armourings made of a highly wear-resistant alloy.

BENEFIT

COMEC impact crushers enable optimum grain form and a low level of fines in the most various applications. Hydraulic systems allow easy access for both maintenance and servicing. Due to reversible rotation, the beater blades have a considerably higher service life.

COLOUR

COMEC offers the opportunity to customize both your equipment and production lines with your desired colours, in order to support your own corporate design.

Features and sizes are not binding and Comec-Binder S.r.l. reserves to effect modifications or improvements for commercial and technical reasons at any moment and without notice.

COMEC

Comec-Binder S.r.l. - Via Molino, 22 - 31050 Badoere di Morgano (TV) - Italy
Tel.: +39 0422 8383, Fax +39 0422 838400, comec@comec.it, www.comec.it